Specification sheet of CLOCK MOVEMENT (17-0002)

Sweep Movement (Fitting method:Center Screw)

Aug-2017
SEIKO CLOCK INC.

Scale 1:2

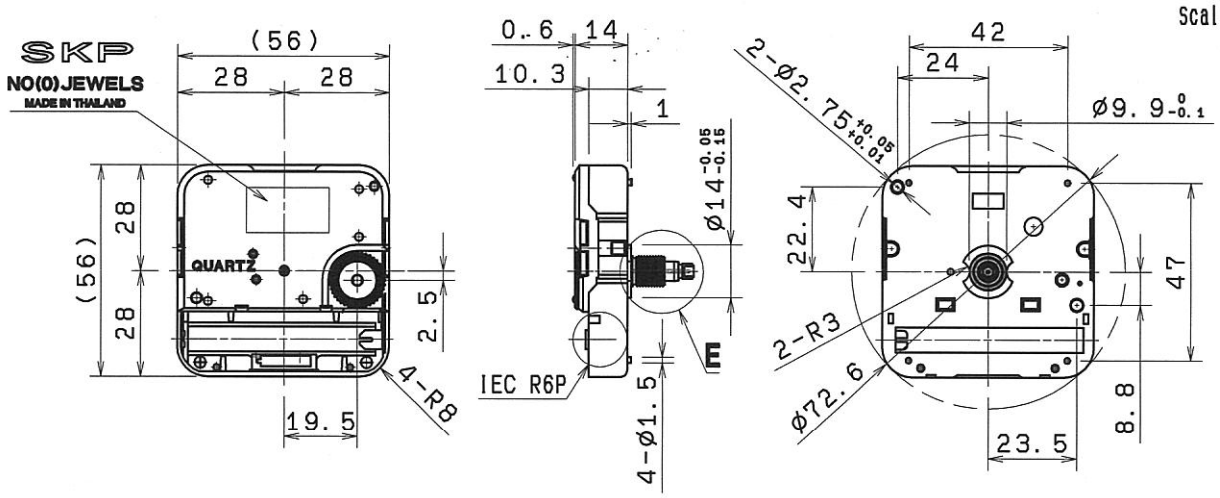

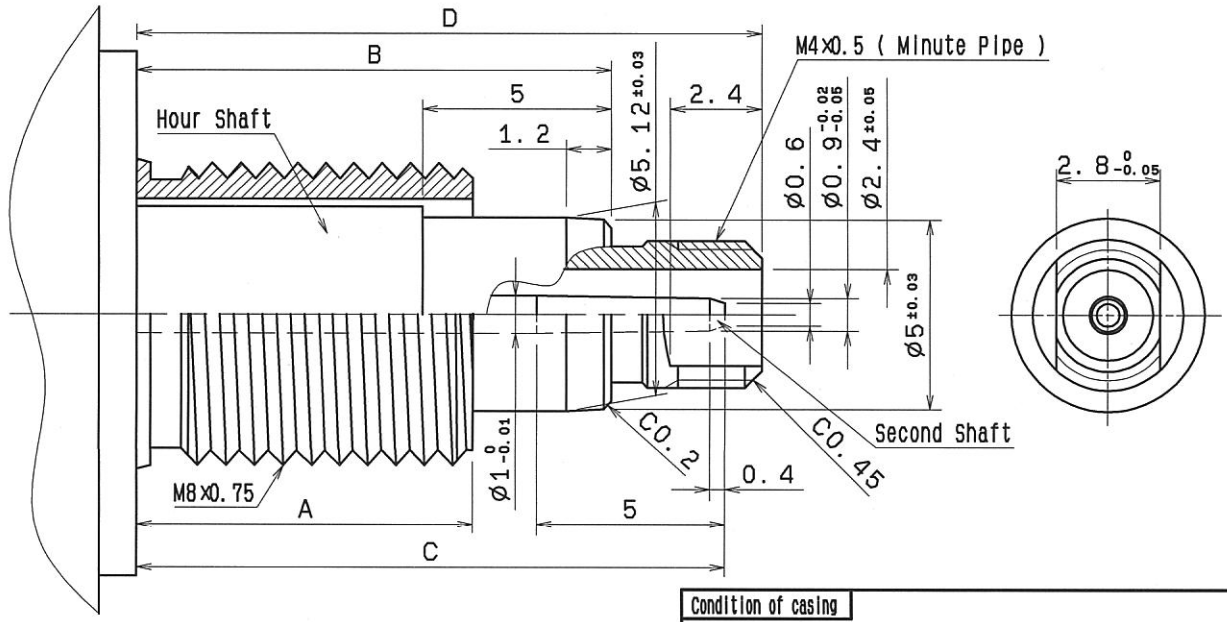

Detail of E (5:1)

Made in SEIKO Factory (Thailand)

CAL.	A:Center Screw	B:Hour Hand	C:Seconds Hand	D:Minute Hand
44505V	8.8	12.5	15.2	16.5

Indication	Hour, Minute and Seconds hand (sweep second)
Starting method	Self starting
Original governor	Crystal oscillator 32.768kHz
Accuracy of time	Average monthly rate : Within ±20sec.
Operating temperrature	(-10~+50)℃
Operating voltage	(1.3~1.7)V
Average current	Less than 360μA/1.5V,23±3℃
Output torque	Seconds hand:More than 1.3×10^{-4}N·m(1.3gf·cm)/1.3V
	Minute Hand :More than 3.6×10^{-3}N·m(36gf·cm)/1.3V
Battery	(JIS IEC R6P) (SUM-3) 1.5V
Battery life	About 6 months

Condition of casing

- Fitting method:Center screw
- The torque to fasten is less than to 1N·m(10 Kgf·cm)
- Pressure for hands press fitting : Less than 50N (5 Kgf)
  【Caution】Support center of UPPER PLATE when fitting hands.
- Metal hands is as follows.
  ※If you use plastic hands , please make dimensions smaller than below.

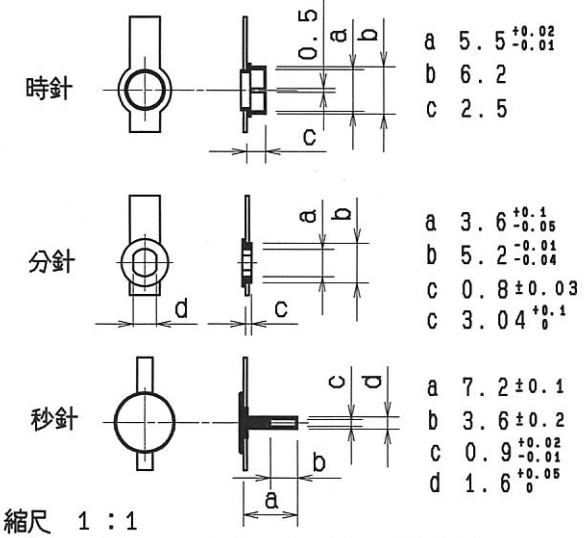

Condition / Hands	Unbalance N·m (gf·cm)	Weight (g)	Length from center (mm)
Seconds hand	Less than 0.3×10^{-4}(0.3)	Less than 3	Less than 150
Minute Hand	Less than 6×10^{-4}(6)	Less than 5	Less than 160
Hour hand	Less than 6×10^{-4}(6)	Less than 5	Less than 160

The above product specifications are subject to change without priornotice for improvement.

3RD ANGLE PROJECTION
UNIT : mm